KLASS

Recommended installation method for 6 mm & 10 mm thick sheets

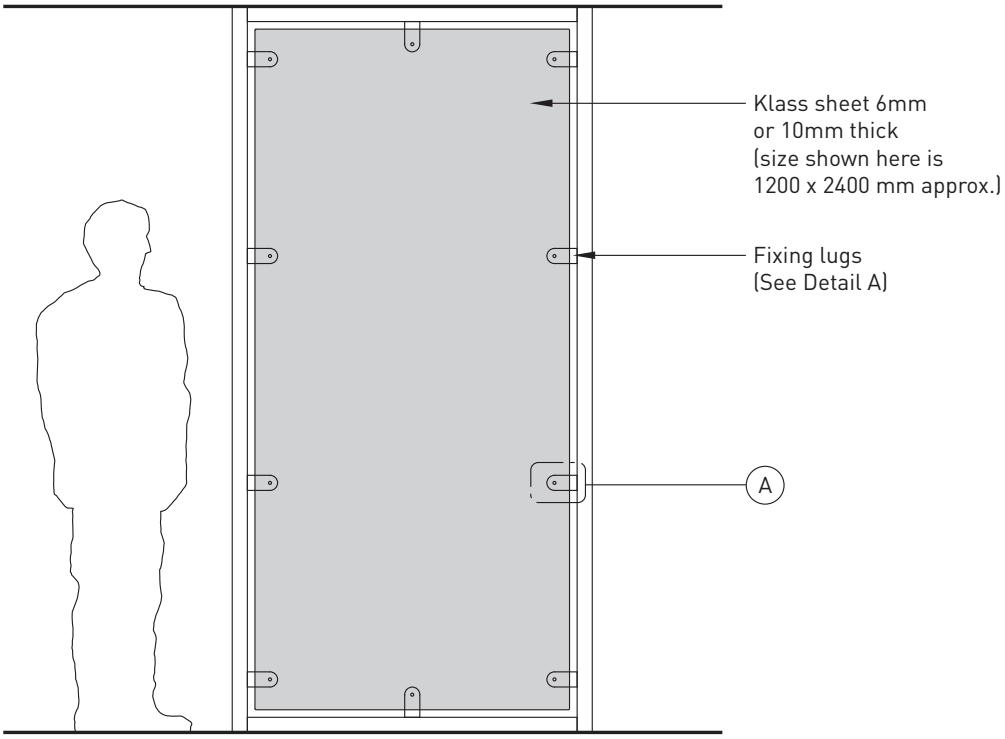

FRONT ELEVATION - Scale:- 1:25 @ A4

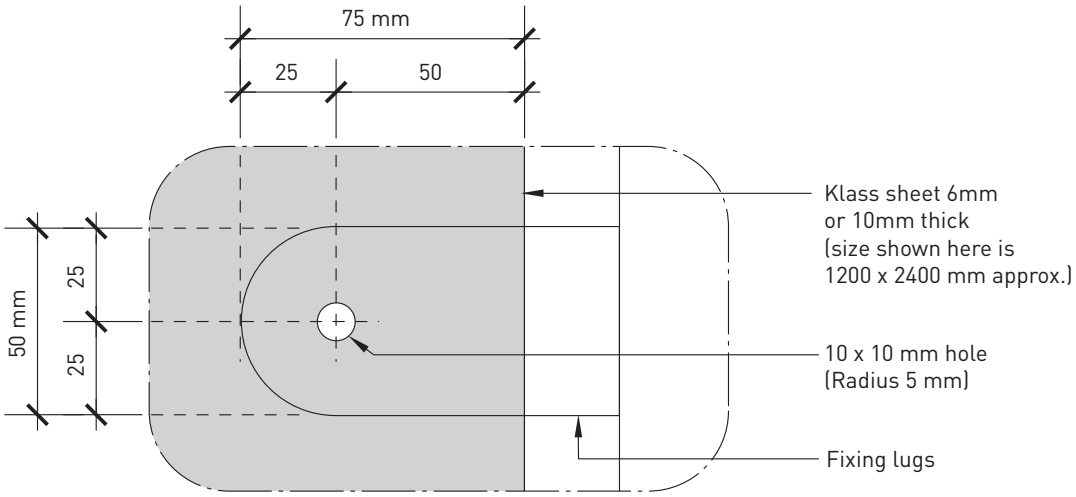

DETAIL A - Scale:- 1:2 @ A4

Our web site offers many "Frequently Asked Questions" which we update on a regular basis.

Visit our website www.klass.com.au or email our info@klass.com.au for any further information.

www.klass.com.au

FILE: D/KLASS/FIXING METHOD.