## multi•mount - standard parts:

## Optional extra:

## multi•mounts are distributed by:

**KLASS**
CREATIVE FINISHES

4 Commercial Road,
KINGSGROVE NSW 2208
Ph: +61 2 9502 1200
Fax: +61 2 9150 7446
info@klass.com.au

www.klass.com.au

SEE OVER FOR MORE INFO ▶▶▶

Piazza™

# multi•mount™

standoff panel mounts

GENUINE • PATENTED • ORIGINAL

## Application: Single Panels

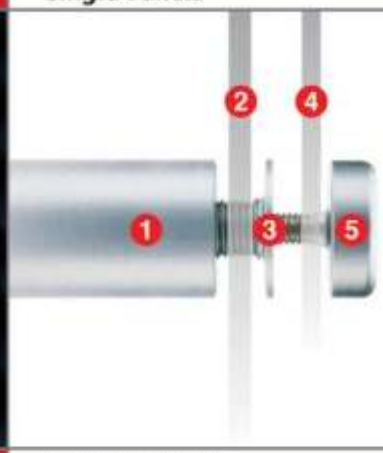


1. A part
2. Heavier panel
3. B part
4. Lighter panel
5. C part

**multi•mounts™ feature patented components developed to deliver significant functional benefits.**

In single-panel installations B parts can support heavier panels and C parts are used for medium/light weight panels.

## Application: Multiple Panels

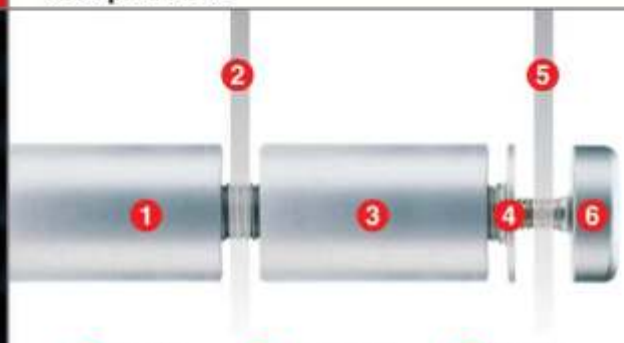


1. A part
2. Back panel
3. D part
4. B part
5. Front panel
6. C part

Combined with A, B and C parts, D parts provide multi-layering capabilities, creating new opportunities for incorporating multiple layers of colour, texture, offset and other dramatic effects. D parts can also be used to simply increase the stand-off distance.

## Application: Image Displays

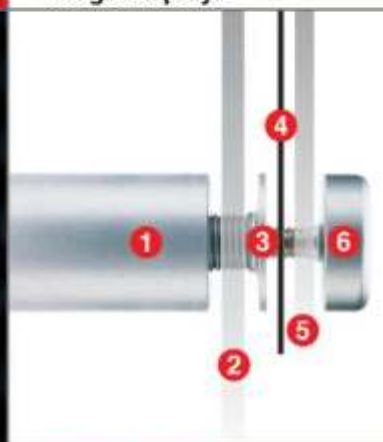


1. A part
2. Back panel
3. B part
4. Graphic image
5. Front panel
6. C part

In dual-panel installations (eg. image display), B parts secure the back panel separately from the front panel. When the front panel is removed, the back panel remains secured, making installation easier and faster, and ensuring image-changing is simple and safe.

**multi•mounts are available in a range of colours and sizes from:**

Piazza multi mounts Distributor

KLASS
CREATIVE FINISHES

4 Commercial Road, KINGSGROVE NSW 2208
Ph: +61 2 9502 1200 Fax: +61 2 9150 7446
info@klass.com.au
www.klass.com.au